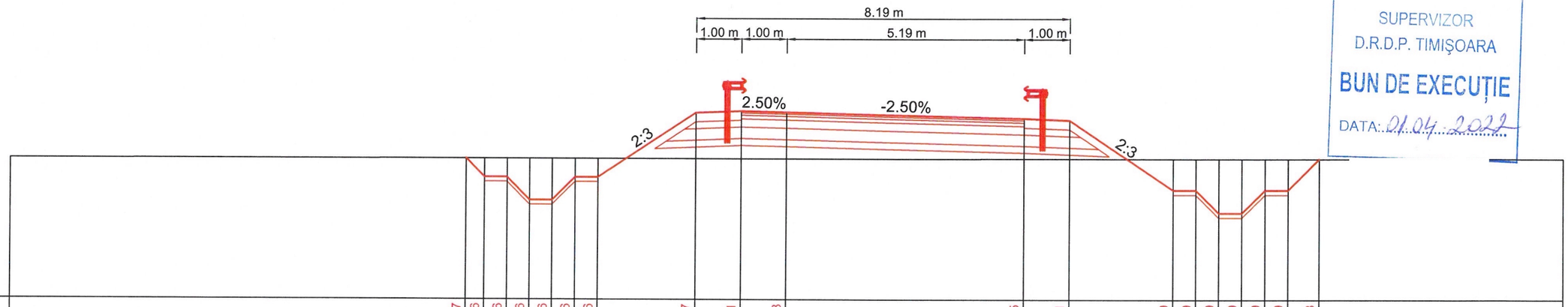

R.L. = 92.00

COTE PROIECT		95.07	94.66	94.66	94.16	94.16	94.66	94.66	96.07	96.11	96.08	95.95	95.91	94.39	94.39	93.89	93.89	94.39	94.39	95.08	
COTE TEREN	95.06	95.07	95.07	95.07	95.07	95.07	95.07	95.07	95.07	95.07	95.07	95.07	95.07	95.08	95.08	95.08	95.08	95.08	95.08	95.08	95.08
DISTANTE	-17.00	-7.02	-6.61	-6.11	-5.61	-5.11	-4.61	-4.11	-2.00	-1.00	0.00	5.19	6.19	8.48	8.98	9.48	9.98	10.48	10.98	11.66	17.00

KM = 200.00

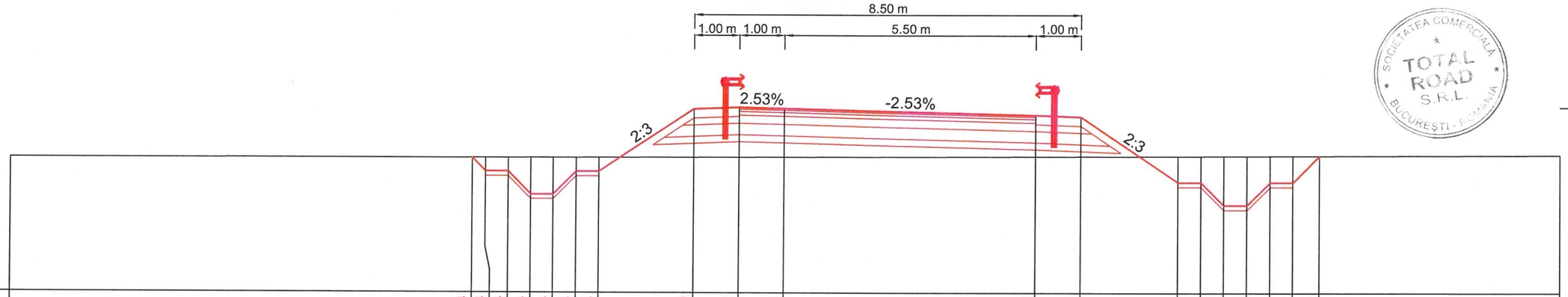

R.L. = 92.00

COTE PROIECT		94.94	94.64	94.64	94.14	94.14	94.64	94.64	96.00	96.04	96.02	95.88	95.84	94.41	94.41	93.91	93.91	94.41	94.41	94.99	
COTE TEREN	94.93	94.94	94.94	94.94	94.94	94.94	94.94	94.94	94.95	94.95	94.96	94.97	94.98	94.98	94.99	94.99	94.99	94.99	94.99	94.99	95.01
DISTANTE	-17.00	-6.85	-6.55	-6.05	-5.55	-5.05	-4.55	-4.05	-2.00	-1.00	0.00	5.50	6.50	8.64	9.14	9.64	10.14	10.64	11.14	11.73	17.00

KM = 180.00

SUPERVIZOR
D.R.D.P. TIMIŞOARA
BUN DE EXECUȚIE
DATA: 01.04.2022

SOCIETATEA COMERCIALA TOTAL ROAD S.R.L. BUCUREŞTI - ROMANIA

BENEFICIAR:	ANTREPRENOR:	TITLU PROIECT	SPECIFICATIE	NUME	SEMNATURA	DATA	TITLU PLANSA:
COMPANIA NATIONALA DE ADMINISTRAREA INFRASTRUCTURII RUTIERE S.A. (C.N.A.I.R. S.A.)	TODINI CONSTRUZIONI GENERALI S.p.A.	PROIECTARE SI EXECUȚIE „DRUM DE LEGĂTURĂ AUTOSTRADA A1 ARAD - TIMIȘOARA - DN 69"	DESENAT	Teh. Sorin VASILACHE		Martie 2022	LUCRARI DE INFRASTRUCTURA RUTIERA
		FAZA PROIECT: PROIECT TEHNIC DE EXECUTIE (P.T.E.)	PROIECTAT	Ing. Mihai COROIAN		MĂRIMEA: A3	PROFILURI TRANSVERSALE CURENTE NOD DC58 - BRETEA 1
		CONTRACT NR.: 92/7703/01.02.2021	SEF PROIECT	Ing. Catalin GRUIANU		SCARĂ: 1:100	NUMAR PLANSA: PTC - 434
		PROIECT NR.: 08/2021	VERIFICAT	Ing. Adrian NISTOR			PICHET: -

Revizie

NR.	DATA	DESCRIERE
0	08.2021	Emitere P.T.E.
1	09.2021	Conf. nr.290/DLA1-224
2	02.2022	Conf. ASR 92/93833

PAGE 1 / 1